120 / 124 / 126 / 128 – SP 01/1994 Print 9 126 703 – Housing / Air filter

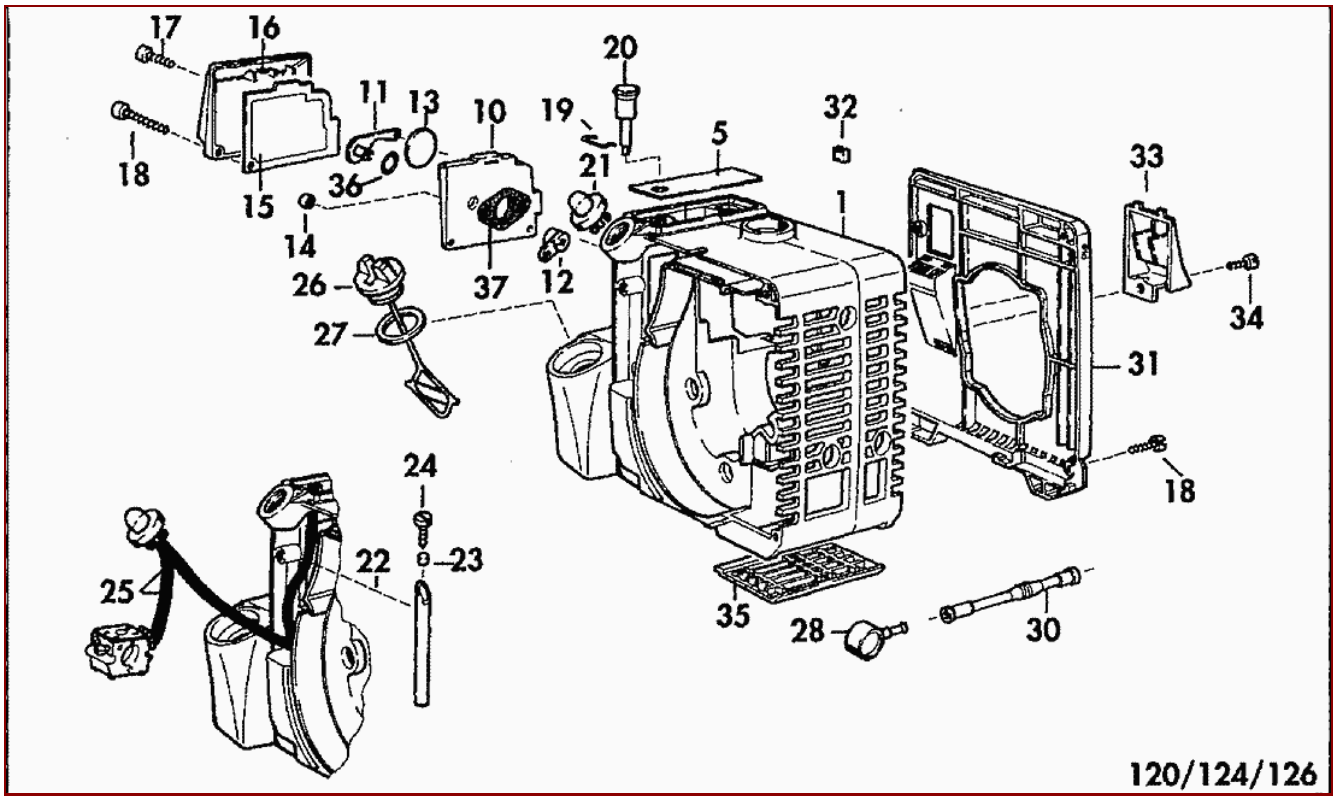

120 / 124 / 126 / 128 – SP 01/1994 Print 9 126 703 – Housing / Air filter

Pos	Art-Nr.	Menge	Einheit	Beschreibung	Modell	Info
1	2100536	1		MAIN HOUSING		
5	2074524	1		COVER PLATE		
10	~~2074462~~	1		~~FILTER PLATE~~		
	2500478	1		FILTER PLATE		
11	2074201	1		CHOKE LEVER		
12	2074202	1		CHOKE LEVER		
13	~~2074667~~	1		~~CHOKE FLAP~~		
	2500478	1		FILTER PLATE		
14	~~0033259~~	1		~~BUSHING~~		
	003325925	1		TUBE		
15	2048273	1		AIR FILTER		
16	2074812	1		FILTER COVER		
17	0018355	1		SCREW		
18	0018356	1		SCREW		
19	2036319	1		CHOKE LINKAGE		
20	2074465	1		CHOKE BUTTON		
21	~~2700322~~	1		~~PRIMER~~		
	2700448	1		PRIMER		
22	0064300	1		TUBE		
23	3048280	1		SINTER FILTER		
24	0013214	1		SCREW		
25	0064407	1		FUEL HOSE		
26	~~2700287~~	1		~~TANK CAP~~		
	2700353	1		TANK LID		
27	~~0061324~~	1		~~GASKET~~		
	0061356	1		GASKET		
28	~~2700285~~	1		~~FUEL PICK UP~~		
	0073351	1		HOSE FITTING		
	2700140	1		FUEL FILTER		
30	2063305	1		FUEL HOSE		
31	2073582	1		REAR COVER		
32	0066339	1		GROMMET		
33	2074477	1		CABLE COVER		
34	0018354	1		LENS HEAD SCREW		
35	2074481	1		EXHAUST PROTECTION		
36	0062136	1		O-RING		
37	2061475	1		FILTER PLATE GASKET		

120 / 124 / 126 / 128 – SP 01/1994 Print 9 126 703 – Engine/Ignition/Carburetor

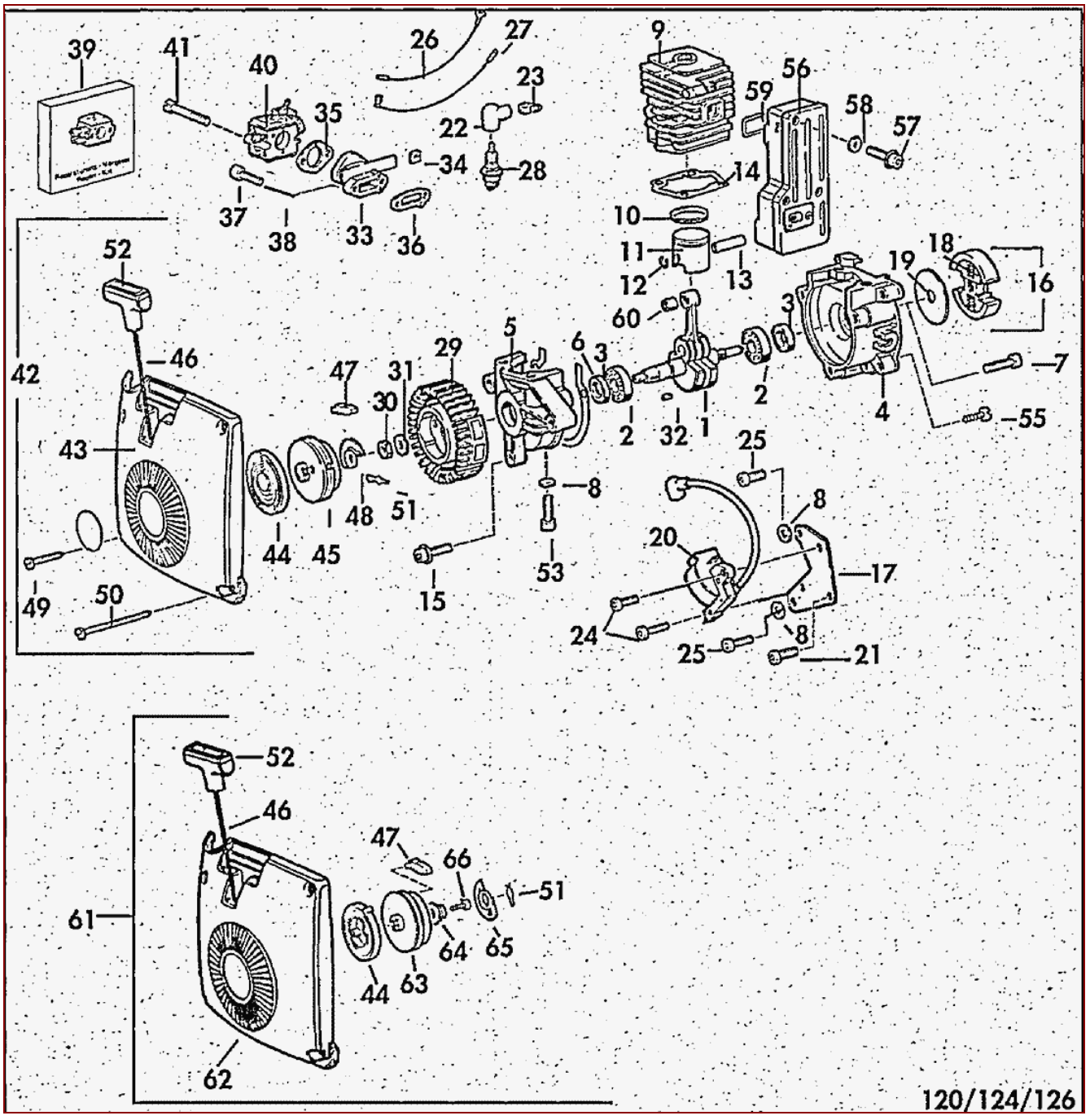

120 / 124 / 126 / 128 – SP 01/1994 Print 9 126 703 – Engine/Ignition/Carburetor

Pos	Art-Nr.	Menge	Einheit	Beschreibung	Modell	Info
1	2200996	1		CRANKSHAFT		
2	0050174	1		BALL BEARING		
3	0054237	1		OIL SEAL		
4	2011724	1		CRANKCASE		
5	2011725	1		CRANKCASE HALF		
6	2061463	1		CRANKCASE GASKET		
7	0018339	1		F.H. SCREW		
8	0072148	1		DISC SPRING		
9	2011723	1		CYLINDER		
10	2048346	1		PISTON RING		
11	~~2200980~~	1		~~PISTON~~		
	2200165	1		PISTON		
12	0055207	1		PISTON PIN CIRCLIP		
13	~~2031902~~	1		~~PISTON PIN~~		
	203190225	1		PISTON PIN		
14	2061462	1		CYLINDER FOOT GASKET		
15	0018336	1		SCREW		
16	~~3500392~~	1		~~CENTRIFUGAL CLUTCH~~		
	35004651	1		CENTRIFUGAL CLUTCH		
16	~~3500402~~	1		~~CENTRIFUGAL CLUTCH~~		
	35004651	1		CENTRIFUGAL CLUTCH		
17	6300228	1		FIXING PLATE		
18	0070258	1		CLUTCH SPRING		
19	0031516	1		WASHER		
20	2300695	1		IGNITION COIL		
21	0018336	1		SCREW		
22	~~0084600~~	1		~~SPARK PLUG CAP~~		
	0073347	1		CONTACT SPRING		
	0084621	1		SPARK PLUG CAP		
23	~~0073385~~	1		~~CONTACT SPRING~~		
	0073347	1		CONTACT SPRING		
	0084621	1		SPARK PLUG CAP		
24	0018326	1		F.H. SCREW		
25	0018280	1		SCREW		
26	0084605	1		GROUND WIRE		
27	0084606	1		SHORT-CIRCUIT CABLE		
28	~~2300389~~	1		~~SPARK PLUG.~~		
	2300730	1		SPARK PLUG		
29	2400282	1		FAN WHEEL		
30	~~0020206~~	0		~~HEX. NUT~~		
	0021258	1		HEXAGON NUT M8X1X6.5		
31	0072141	0		WASHER		
32	0075101	0		WOODRUFF KEY		
33	2074424	0		INTAKE MANIFOLD		
34	0021235	0		NUT		
35	~~2061454~~	0		~~CARBURETOR GASKET~~		
	2061464	1		CARBURETOR GASKET		
36	2061453	0		MANIFOLD GASKET		
37	0018337	0		F.H. SCREW		
39	~~0510860~~	0		~~CARB REPAIR KIT~~		
	0510984	1		REPAIR KIT CARBURATOR		
40	2300674	0		CARBURETOR		
40	~~2074905~~	0		~~RETAINING RING~~		
	2074600	1		RETAINING RING		
41	0011250	0		SCREW		
42	~~2600258~~	0		~~STARTER HOUSING~~		

38	0010519	1		SCREW		
38	0031611	1		WASHER		
38	006319525	1		STARTER ROPE		
38	0073365	1		SPRING PIN		
38	2031965	1		SPACER		
38	2074343	1		STARTER PAWL		
38	2074570	1		STARTER GRIP		
38	2074977	1		TEMPLATE		
38	2074978	1		ROPE PULLEY		
38	2100573	1		STARTER HOUSING		
38	2600284	1		SPRING CASSETTE		
43	~~2100462~~	0		~~STARTER HOUSING~~		
38	0010519	1		SCREW		
38	0031611	1		WASHER		
38	006319525	1		STARTER ROPE		
38	0073365	1		SPRING PIN		
38	2031965	1		SPACER		
38	2074343	1		STARTER PAWL		
38	2074570	1		STARTER GRIP		
38	2074977	1		TEMPLATE		
38	2074978	1		ROPE PULLEY		
38	2100573	1		STARTER HOUSING		
38	2600284	1		SPRING CASSETTE		
44	2600216	0		REWIND SPRING		
45	~~2074316~~	0		~~ROPE PULLEY~~		
38	2074978	1		ROPE PULLEY		
46	~~0063195~~	0		~~STARTER ROPE~~		
38	006319525	1		STARTER ROPE		
47	2074343	0		STARTER PAWL		
48	~~2074336~~	0		~~TEMPLATE~~		
38	2074977	1		TEMPLATE		
49	0010384	0		SCREW		
50	0010428	0		F.H. SCREW		
51	0073365	0		SPRING PIN		
52	~~2074569~~	0		~~STARTER GRIP~~		
38	2074570	1		STARTER GRIP		
53	0010107	0		F.H.SCREW		
55	0018357	0		SCREW		
56	2500660	0		MUFFLER		
57	0018340	0		F.H. SCREW		
58	0072144	0		TENSION WASHER		
59	2061452	0		EXHAUST GASKET		
60	0052226	0		NEEDLE BEARING		
61	2600280	0		STARTER		
62	2100573	0		STARTER HOUSING		
63	2074978	0		ROPE PULLEY		
64	~~2031995~~	0		~~SPACER~~		
38	0031611	1		WASHER		
38	2031965	1		SPACER		
65	2074977	0		TEMPLATE		
66	0018384	0		SCREW		

120 / 124 / 126 / 128 – SP 01/1994 Print 9 126 703 – 126/128 Handle/ Throttle control

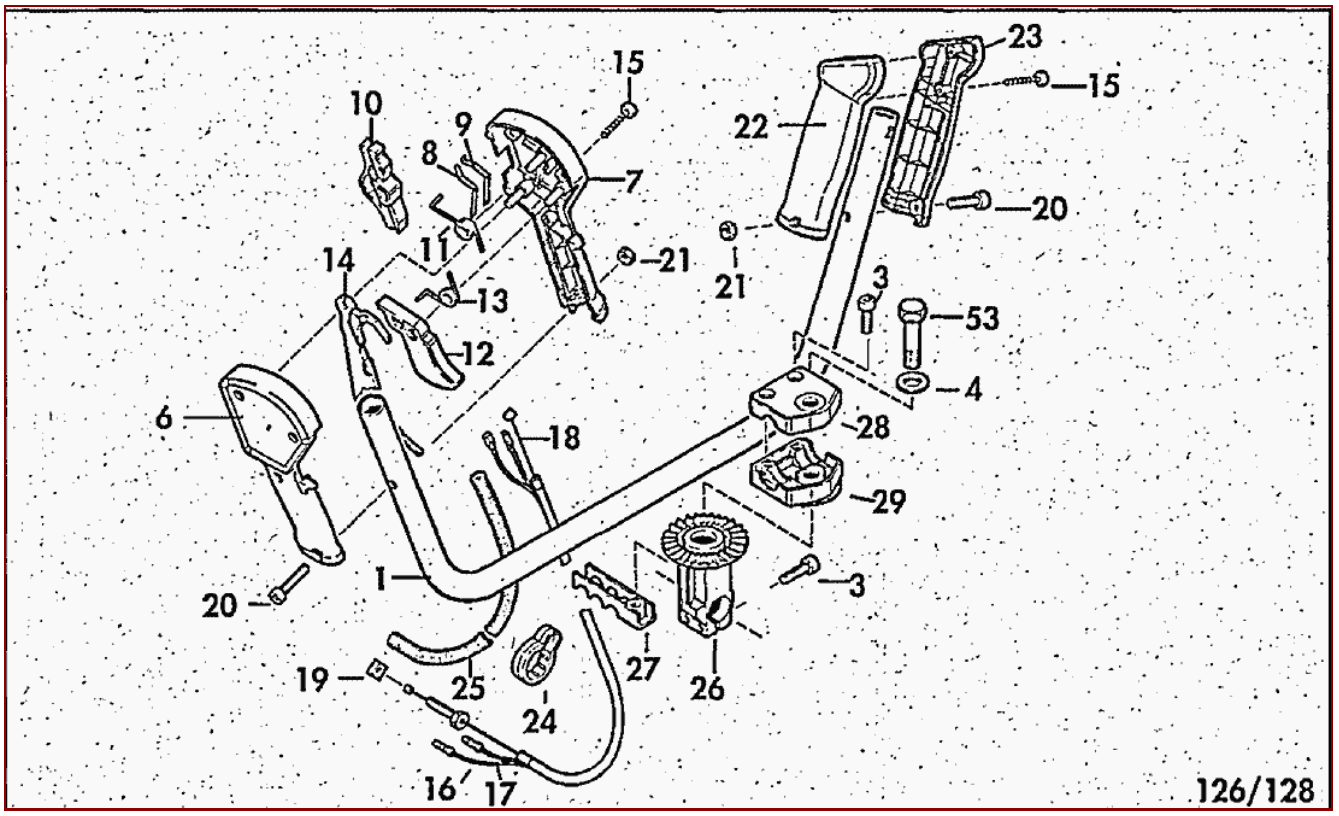

120 / 124 / 126 / 128 – SP 01/1994 Print 9 126 703 – 126/128 Handle/ Throttle control

Pos	Art-Nr.	Menge	Einheit	Beschreibung	Modell	Info
1 3↯	~~6035370~~ 6035148	1 1		~~HANDLE BAR~~ HANDLE TUBE 22X1,5 AL. BIKE		
3	0018337	1		F.H. SCREW		
4	0030128	1		WASHER		
6	6073569	1		OUTER GRIP HALF RH		
7	6073570	1		INNER GRIP HALF RH		
8	0073388	1		CONTACT SPRING		
9	0073389	1		CONTACT SPRING		
10	6073572	1		SLIDE		
11	0073387	1		SPRING		
12	6073573	1		THROTTLE LEVER		
13	0073386	1		SPRING		
14	6073571	1		SAFETY LEVER		
15	0018356	1		SCREW		
16	0084617	1		GROUND WIRE		
17	0084618	1		SHORT-CIRCUIT CABLE		
18	2800323	1		BOWDEN CABLE GAS		
19	0021235	1		NUT		
20	0018339	1		F.H. SCREW		
21	0020131	1		HEX.NUT		
22	6073568	1		INNER GRIP HALF LH		
23	6073567	1		OUTER GRIP HALF LH		
24	6074527	1		CABLE CLIP		
24	6074528	1		CABLE CLIP		
25 3↯	~~0064402~~ 006441527	1 1	 M	~~HOSE~~ TUBE		
26 3↯	~~6012843~~ 601284325	1 1		~~CIRCLIP~~ SUPPORT		
26	6012853	1		CLAMPING SUPPORT		
27 3↯	~~6800223~~ 6800264	1 1		~~HARNESS HOOK~~ STRAP HOLDER		
28 3↯	~~6012836~~ 601283625	1 1		~~HANDLEBAR CLAMP CUP~~ CUP 1 22D BLACK		
29 3↯	~~6012837~~ 601283725	1 1		~~HANDLEBAR CLAMP CUP~~ CUP 2 22D BLACK		
56	0012376	1		HEX. SCREW		

120 / 124 / 126 / 128 – SP 01/1994 Print 9 126 703 – 120/124 Handle/ Throttle control

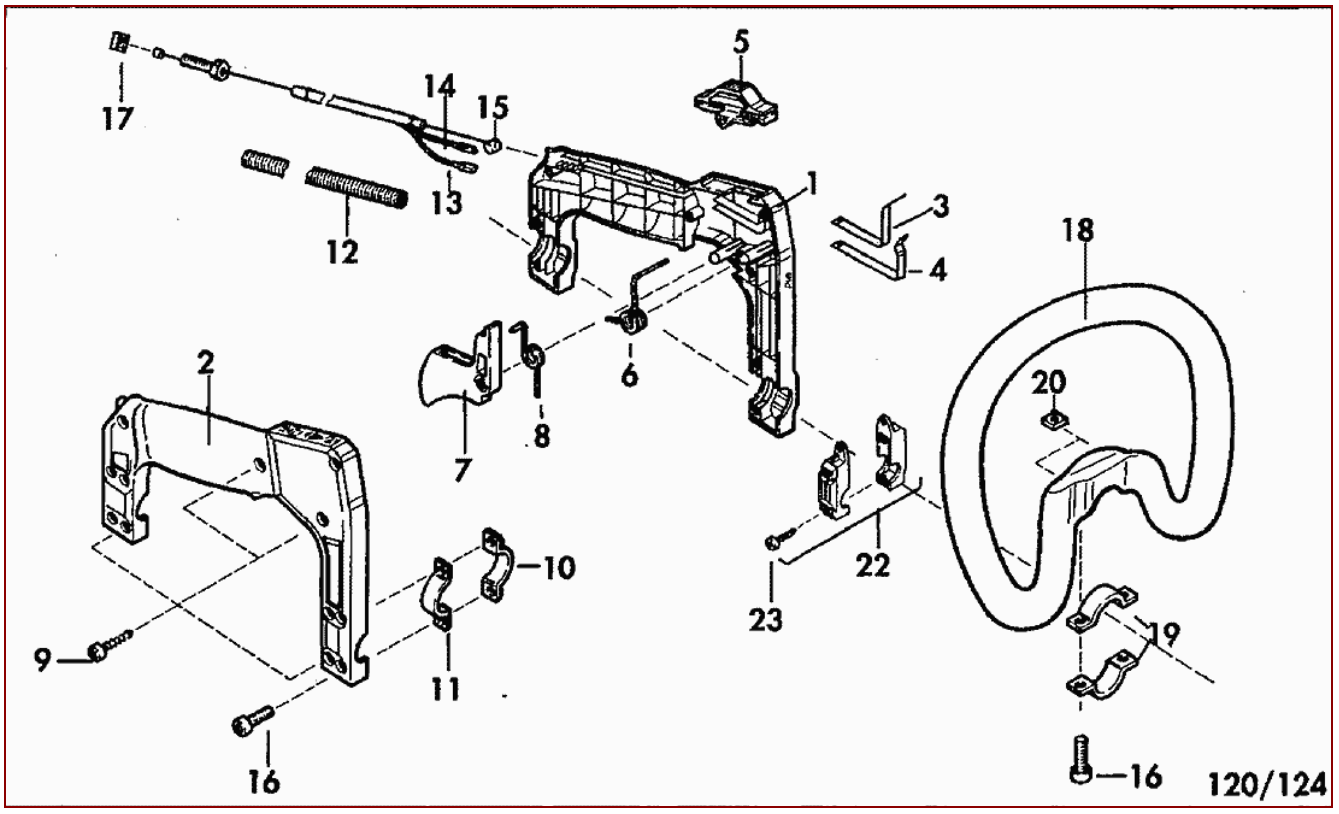

120 / 124 / 126 / 128 – SP 01/1994 Print 9 126 703 – 120/124 Handle/ Throttle control

Pos	Art-Nr.	Menge	Einheit	Beschreibung	Modell	Info
1	~~6073585~~	1		~~HANDLE GRIP (LEFT)~~		
↳	6800248	1		HANDLE		
2	~~6073586~~	1		~~HANDLE GRIP (RIGHT)~~		
↳	6800248	1		HANDLE		
3	0073388	1		CONTACT SPRING		
4	0073389	1		CONTACT SPRING		
5	6073572	1		SLIDE		
6	0073387	1		SPRING		
7	6073573	1		THROTTLE LEVER		
8	0073386	1		SPRING		
9	0018356	1		SCREW		
10	6800246	1		CLAMP		
11	6043439	1		CLAMP		
12	~~0064401~~	1		~~CABLE COVER~~		
↳	006441527	1	M	TUBE		
13	0084609	1		GROUND WIRE		
14	0084608	1		SHORT-CIRCUIT CABLE		
15	2800318	1		BOWDEN CABLE GAS		
16	0018338	1		F.H. SCREW		
17	0021235	1		NUT		
18	6073584	1		LOOP HANDLE BAR		
19	6043438	1		CLAMP		
20	0021241	1		SQUARE NUT		
22	~~6300301~~	1		~~HARNESS HOOK~~		
↳	0018357	2		SCREW		
↳	2074931	1		SHOULD. STRAP HANGER		
↳	2074932	1		SHOULD. STRAP HANGER		
23	0018357	1		SCREW		

120 / 124 / 126 / 128 – SP 01/1994 Print 9 126 703 – 124/126/128 Gear / Protection

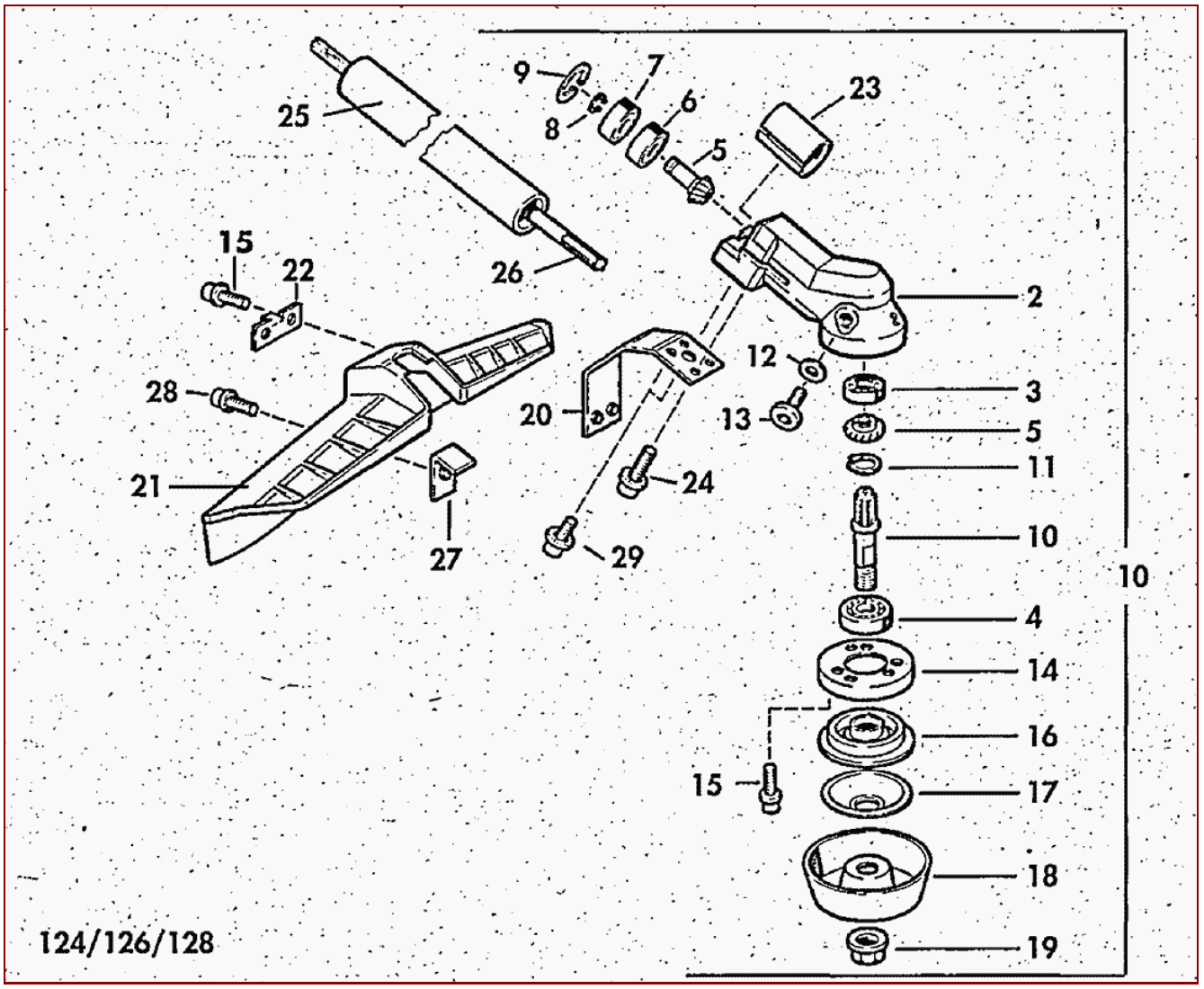

120 / 124 / 126 / 128 – SP 01/1994 Print 9 126 703 – 124/126/128 Gear / Protection

Pos	Art-Nr.	Menge	Einheit	Beschreibung	Modell	Info
1	3000203	1		GEAR ASSY.		
2	~~3011719~~	1		~~GEAR HOUSING~~		
↳	3000154	1		GEAR BOX ASSY		
↳	6043451	1		SLEEVE		
3	0050199	1		BALL BEARING		
4	0050198	1		BALL BEARING		
5	0610405	1		SPROCKET SET		
6	0050174	1		BALL BEARING		
7	0050197	1		BALL BEARING		
8	0055134	1		CIRCLIP		
9	0055166	1		CIRCLIP		
10	3031305	1		GEAR SHAFT		
11	0055273	1		CIRCLIP		
12	0061210	1		GASKET 10X13,5X1		
13	~~0018387~~	1		~~LOCKING SCREW~~		
↳	0016126	1		SCREW		
14	3043415	1		ANTI-CLOGGING DEVICE		
15	0018336	1		SCREW		
16	~~3031306~~	1		~~PRESSURE PLATE~~		
↳	303196825	1		PRESSURE PIECE		
17	~~3043417~~	1		~~THRUST WASHER~~		
↳	303196825	1		PRESSURE PIECE		
↳	3043441	1		WASHER		
18	3043427	1		NUT PROTECTOR		
19	0021240	1		HEX. NUT		
20	6300215	1		FIXING PLATE		
21	~~6073574~~	1		~~PROTECTION~~		
↳	6900107	1		GUARD STRIP		
22	6043418	1		PLATE		
23	~~6043422~~	1		~~SLEEVE~~		
↳	604342225	1		SLEEVE		
24	0018340	1		F.H. SCREW		
25	~~6300225~~	1		~~SHAFT TUBE~~		
↳	0069381	1		DECAL		
↳	630025952	1		SHAFT UBE		
↳	6900100	1		PROTECTION FASTENING		
25	~~6300218~~	1		~~SHAFT~~		
↳	6300313	1		SHAFT TUBE		
26	~~6035335~~	1		~~DRIVE SHAFT~~		
↳	6035389	1		DRIVE SHAFT		
27	6900688	1		BLADE		
28	0018334	1		F.H. SCREW		
29	0018336	1		SCREW		

120 / 124 / 126 / 128 – SP 01/1994 Print 9 126 703 – 120 Shaft / Protection

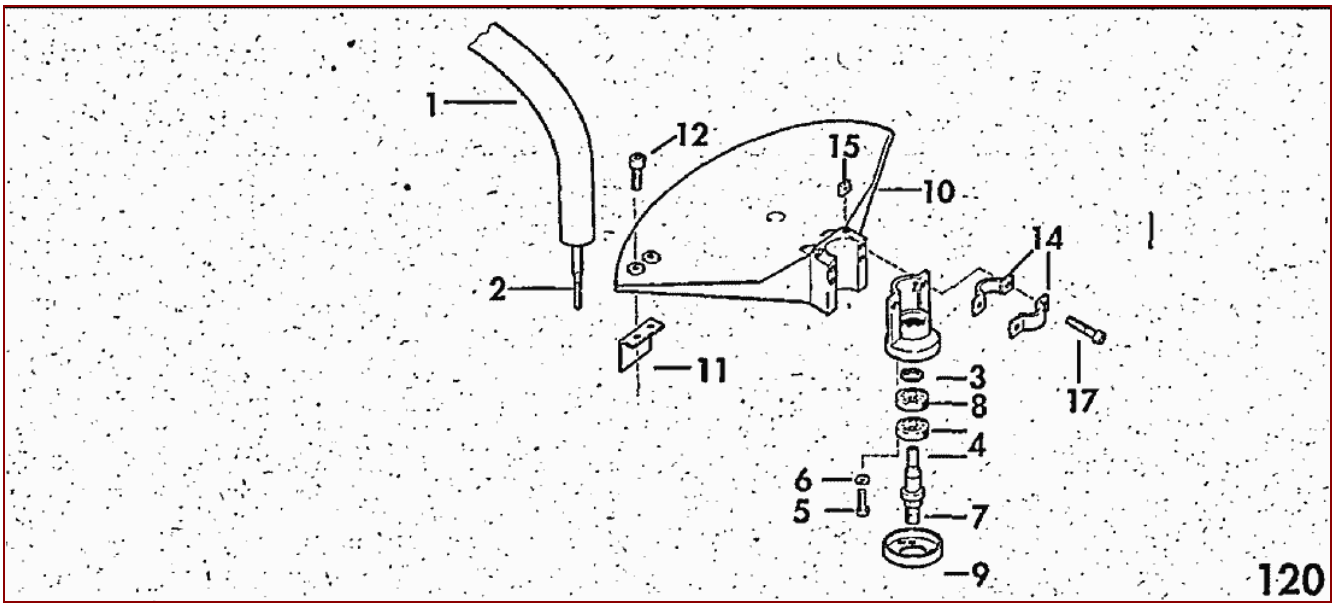

120 / 124 / 126 / 128 – SP 01/1994 Print 9 126 703 – 120 Shaft / Protection

Pos	Art-Nr.	Menge	Einheit	Beschreibung	Modell	Info
1 3↳	~~6300312~~ 630025425	1 1		~~SHAFT TUBE~~ SHAFT TUBE		
2	6035342	1		FLEX SHAFT		
3 3↳	~~6073583~~ 607358325	1 1		~~HOUSING~~ HOUSING		
4	0050173	1		BALL BEARING		
5	0018274	1		LENS HEAD SCREW		
6	0072140	1		DISC SPRING		
7 3↳	~~3031314~~ 2100535	1 1		~~SHAFT~~ HOUSING		
8	0055134	1		CIRCLIP		
9	3043432	1		ANTI-CLOGGING DEVICE		
10 3↳	~~6073589~~ 607358925	1 1		~~PROTECTION~~ PROTECTION		
11 3↳ 3↳	~~6900721~~ 0028130 6043373	1 2 1		~~LINE CUTTER~~ NUT KNIFE		
12	0018336	1		SCREW		
14	6043423	1		CLAMP		
15	0021241	1		SQUARE NUT		
17	0018339	1		F.H. SCREW		

120 / 124 / 126 / 128 – SP 01/1994 Print 9 126 703 – Connection flage / Clutch drum

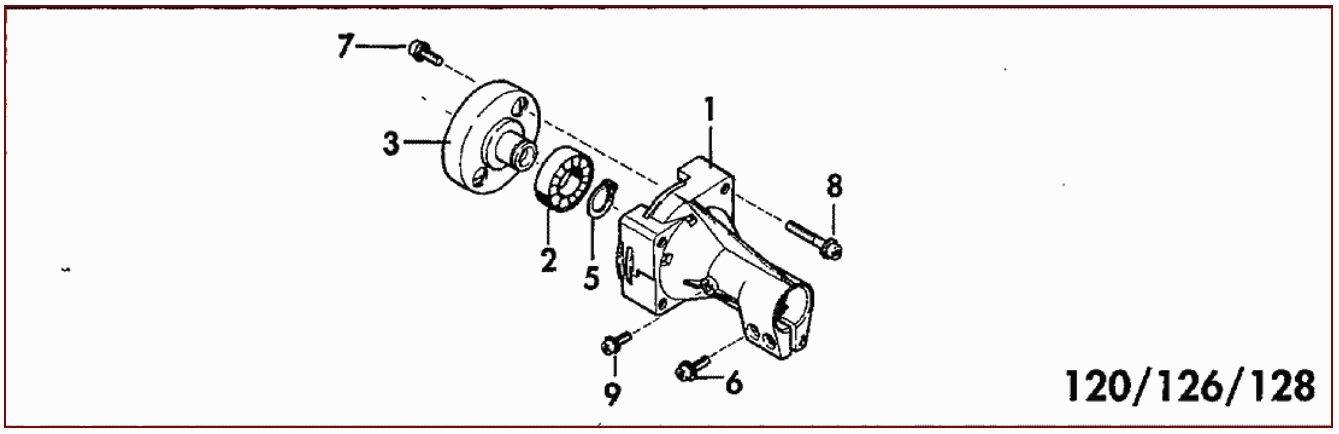

120 / 124 / 126 / 128 – SP 01/1994 Print 9 126 703 – Connection flage / Clutch drum

Pos	Art-Nr.	Menge	Einheit	Beschreibung	Modell	Info
1	2011726	1		FLANGE HOUSING		
2	0050198	1		BALL BEARING		
3	3500389	1		CLUTCH DRUM		
3	3500394	1		CLUTCH DRUM WITH HUB		
5	0055136	1		CIRCLIP		
6	0018337	1		F.H. SCREW		
7	0018334	1		F.H. SCREW		
8	0018340	1		F.H. SCREW		
9	0018323	1		F.H. SCREW		

120 / 124 / 126 / 128 – SP 01/1994 Print 9 126 703 – 128 Engine/Ignition/Carburetor

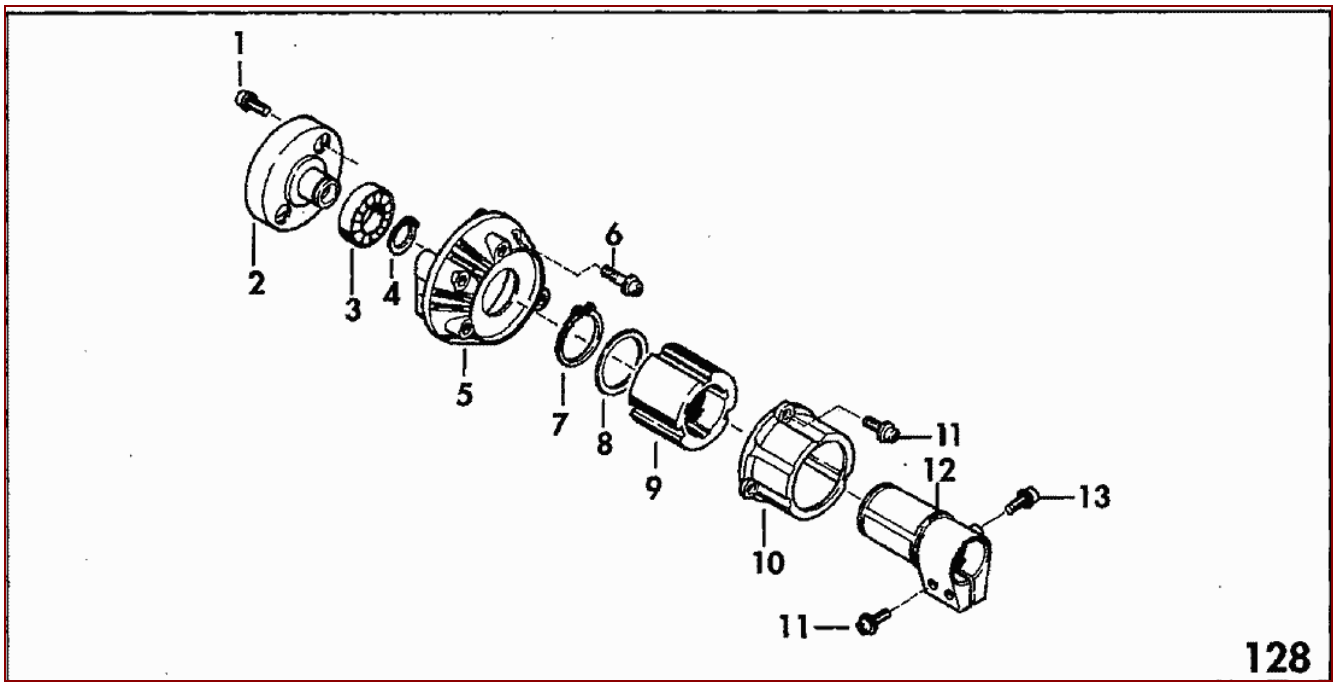

120 / 124 / 126 / 128 – SP 01/1994 Print 9 126 703 – 128 Engine/Ignition/Carburetor

Pos	Art-Nr.	Menge	Einheit	Beschreibung	Modell	Info
1	0018334	1		F.H. SCREW		
2	3500389	1		CLUTCH DRUM		
3	0050198	1		BALL BEARING		
4	0055136	1		CIRCLIP		
5	2011753	1		FLANGE HOUSING		
6	0018340	1		F.H. SCREW		
7	0055275	1		CIRCLIP		
8	0031570	1		WASHER		
9	0094290	1		RUBBER CONNEXION		
10 3↔	~~2011741~~ 201174125	1 1		~~FLANGE HOUSING~~ FLANGE HOUSING		
11	0018337	1		F.H. SCREW		
12	2011752	1		TIGHTENING PIECE		
13	0018323	1		F.H. SCREW		

120 / 124 / 126 / 128 – SP 01/1994 Print 9 126 703 – Accessories

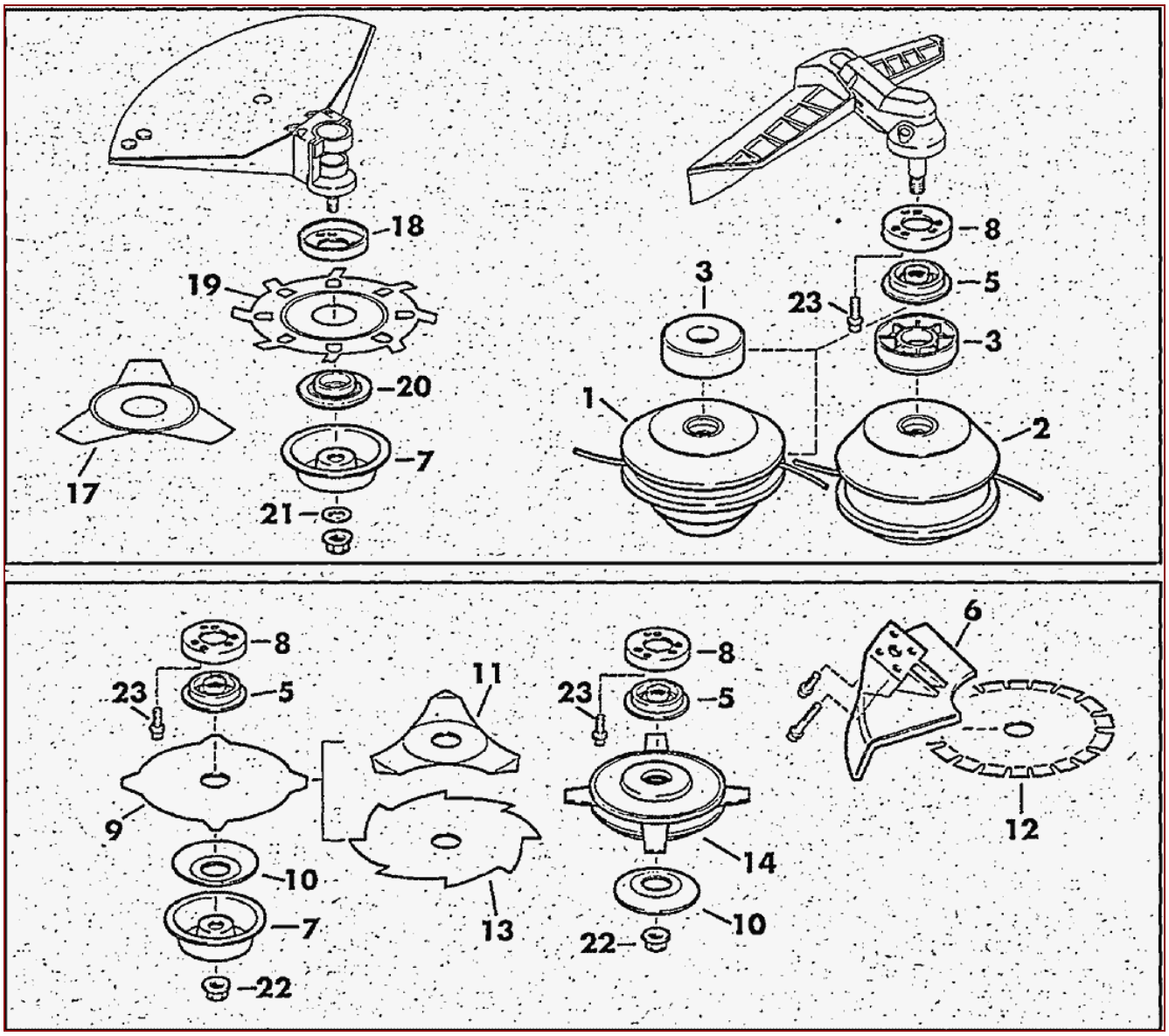

120 / 124 / 126 / 128 – SP 01/1994 Print 9 126 703 – Accessories

Pos	Art-Nr.	Menge	Einheit	Beschreibung	Modell	Info
1 3↯	~~6900709~~ 6900630	1 1		~~MANUAL NYLON HEAD~~ MANUAL NYLON HEAD		
- 3↯	~~0063184~~ 6900942	1 1		~~REPLACEMENT LINE 15M~~ NYLON CORD		
2 3↯	~~6900710~~ 69006536	1 1		~~STRING HEAD, AUTOM.~~ NYLON HEAD		
3	2074857	1		ANTI CLOGGING GUARD		
5 3↯	~~3031306~~ 303196825	1 1		~~PRESSURE PLATE~~ PRESSURE PIECE		
6 3↯	~~6012841~~ 601284125	1 1		~~STOP~~ BUFFER		
7	3043427	1		NUT PROTECTOR		
8	3043415	1		ANTI-CLOGGING DEVICE		
9	6900659	1		MOWINGBLADE 4-CUTTER		
10 3↯ 3↯	~~3043417~~ 303196825 3043441	1 1 1		~~THRUST WASHER~~ PRESSURE PIECE WASHER		
11 3↯	~~6900697~~ 6900947	1 1		~~3 TOOTH BRUSH BLADE~~ BRUSH BLADE		
12	6900695	1		SAW BLADE		
12 3↯	~~6900705~~ 6900695	1 1		~~SAW BLADE SCARLET~~ SAW BLADE		
13	6900693	1		GRASS CUTTING BLADE		
14	6900660	1		ROTOTRIM MOWINGBLADE		
17 3↯	~~6074584~~ 6900720	1 1		~~GRASS CUTTING BLADE~~ 3-TOOTH NYLON BLADE		
18	3043432	1		ANTI-CLOGGING DEVICE		
19 3↯	~~6074900~~ 6900720	1 1		~~WEED FLEX BLADE~~ 3-TOOTH NYLON BLADE		
20	2074586	1		THRUST WASHER		
21	0072120	1		WASHER		
22	0028148	1		HEX. NUT		
23	0018336	1		SCREW		
24 3↯	~~0063184~~ 6900942	1 1		~~REPLACEMENT LINE 15M~~ NYLON CORD		

120 / 124 / 126 / 128 – SP 01/1994 Print 9 126 703 – Accessories

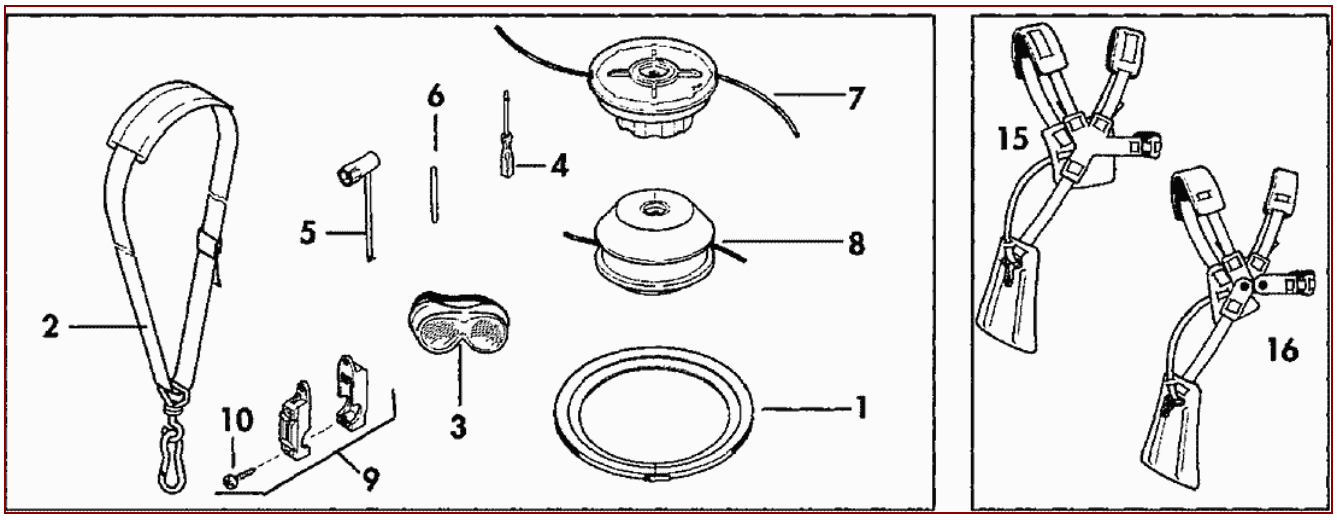

120 / 124 / 126 / 128 – SP 01/1994 Print 9 126 703 – Accessories

Pos	Art-Nr.	Menge	Einheit	Beschreibung	Modell	Info
15 3↯	~~6300322~~ 6300300	1 1		~~DOUBLE SHOULD.HARNESS~~ DOUBLE HARNESS		
16	6300300	1		DOUBLE HARNESS		

120 / 124 / 126 / 128 – SP 01/1994 Print 9 126 703 – Tools

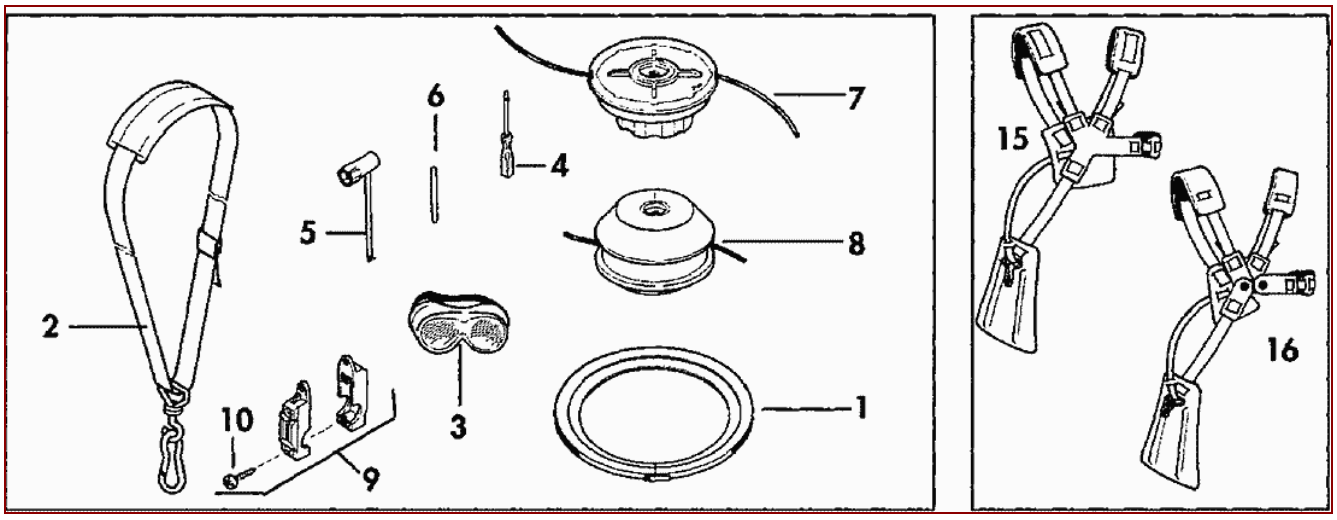

120 / 124 / 126 / 128 – SP 01/1994 Print 9 126 703 – Tools

Pos	Art-Nr.	Menge	Einheit	Beschreibung	Modell	Info
1	~~6300221~~	1		~~TRANSPORT.GUARD 230D~~		
	6073534	1		TRANSPORT PROTECTION		
2	~~6300193~~	1		~~CARRYING STRAP~~		
	6900924	1		CARRYING STRAP		
3	~~6900691~~	1		~~SAFETY GOGGLES~~		
	993900002	1				
4	0080494	1		SCREW-DRIVER 3 SOLO RED		
5	0080509	1		COMBI WRENCH 19/T25		
6	~~0080496~~	1		~~LOCKING PIN~~		
	008051425	1		ASSEMBLING PIN 5		
7	~~6900279~~	1		~~MANUAL NYLON HEAD~~		
	69006507	1		NYLON HEAD		
8	~~6900700~~	1		~~NYLON HEAD~~		
	69006507	1		NYLON HEAD		
9	~~6300301~~	1		~~HARNESS HOOK~~		
	0018357	2		SCREW		
	2074931	1		SHOULD. STRAP HANGER		
	2074932	1		SHOULD. STRAP HANGER		
10	0018357	1		SCREW		